SYSTEM N° C–AJ–2574
XHEZ.C–AJ–2574
THROUGH–PENETRATION FIRESTOP SYSTEMS

DESIGN/SYSTEM/CONSTRUCTION/ASSEMBLY USAGE DISCLAIMER:

- AUTHORITIES HAVING JURISDICTION SHOULD BE CONSULTED IN ALL CASES AS TO THE PARTICULAR REQUIREMENTS COVERING THE INSTALLATION AND USE OF UL CERTIFIED PRODUCTS, EQUIPMENT, SYSTEM, DEVICES, AND MATERIALS.
- AUTHORITIES HAVING JURISDICTION SHOULD BE CONSULTED BEFORE CONSTRUCTION.
- FIRE RESISTANCE ASSEMBLIES AND PRODUCTS ARE DEVELOPED BY THE DESIGN SUBMITTER AND HAVE BEEN INVESTIGATED BY UL FOR COMPLIANCE WITH APPLICABLE REQUIREMENTS. THE PUBLISHED INFORMATION CANNOT ALWAYS ADDRESS EVERY CONSTRUCTION NUANCE ENCOUNTERED IN THE FIELD.
- WHEN FIELD ISSUES ARISE, IT IS RECOMMENDED THE FIRST CONTACT FOR ASSISTANCE BE THE TECHNICAL SERVICE STAFF PROVIDED BY THE PRODUCT MANUFACTURER NOTED FOR THE DESIGN. USERS OF FIRE RESISTANCE ASSEMBLIES ARE ADVISED TO CONSULT THE GENERAL GUIDE INFORMATION FOR EACH PRODUCT CATEGORY AND EACH GROUP OF ASSEMBLIES. THE GUIDE INFORMATION INCLUDES SPECIFICS CONCERNING ALTERNATE MATERIALS AND ALTERNATE METHODS OF CONSTRUCTION.
- ONLY PRODUCTS WHICH BEAR UL'S MARK ARE CONSIDERED CERTIFIED.

XHEZ – THROUGH – PENETRATION FIRESTOP SYSTEMS
See General Information for Through–penetration Firestop Systems

SYSTEM N°. C–AJ–2574
F RATING 2 HR
T RATING 0 HR
L RATING AT AMBIENT – LESS THAN 1 CFM/SQ FT
L RATING AT 400 F – LESS THAN 1 CFM/SQ FT
W RATING – CLASS 1 (SEE ITEM 4B)

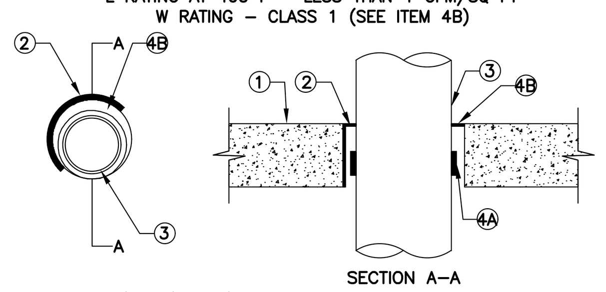

SECTION A–A

1. FLOOR OR WALL ASSEMBLY — MIN 4–1/2 IN. (114 MM) THICK REINFORCED LIGHTWEIGHT OR NORMAL WEIGHT (100–150 PCF OR 1600–2400 KG/M3) CONCRETE. WALL MAY ALSO BE CONSTRUCTED OF ANY UL CLASSIFIED CONCRETE BLOCKS*. SEE TABLE UNDER ITEM 3B FOR MAX DIAM OF OPENING.

SEE CONCRETE BLOCK (CAZT) CATEGORY IN THE FIRE RESISTANCE DIRECTORY FOR NAMES OF MANUFACTURERS.

2. STEEL SLEEVE —(OPTIONAL) – NOM SLEEVE DIAM NOT TO EXCEED MAX OPENING SIZE SPECIFIED UNDER TABLE IN ITEM 3B. SLEEVE SHALL BE SCHEDULE 10 (OR HEAVIER) STEEL PIPE OR MIN NO. 26 GA (0.022 IN. OR 0.56 MM THICK) SHEET STEEL SLEEVE WITH SQUARE ANCHOR FLANGE SPOT WELDED TO THE SLEEVE AT APPROX MID–HEIGHT. STEEL SLEEVE CAST OR GROUTED INTO FLOOR OR WALL ASSEMBLY, FLUSH WITH FLOOR OR WALL SURFACES.

3. THROUGH PENETRANTS — ONE NONMETALLIC PIPE OR CONDUIT TO BE INSTALLED EITHER CONCENTRICALLY OR ECCENTRICALLY WITHIN THE FIRESTOP SYSTEM. THE ANNULAR SPACE BETWEEN THE TUBING AND THE EDGE OF THE OPENING SHALL BE MIN 1/8 IN. TO (3.2 MM) MAX 1/4 IN. (6 MM). PIPE OR CONDUIT TO BE RIGIDLY SUPPORTED ON BOTH SIDES OF THE FLOOR OR WALL ASSEMBLY. THE FOLLOWING TYPES OF PIPE OR CONDUIT MAY BE USED:

A) POLYVINYL CHLORIDE (PVC) PIPE — NOM 4 IN. (102 MM) DIAM (OR SMALLER) SCHEDULE 40 SOLID CORE OR CELLULAR CORE PVC PIPE FOR USE IN CLOSED (PROCESS OR SUPPLY) OR VENTED (DRAIN, WASTE OR VENT) PIPING SYSTEMS.
B) CHLORINATED POLYVINYL CHLORIDE (CPVC) PIPE — NOM 4 IN. (102 MM) DIAM (OR SMALLER) SDR17 CPVC PIPE FOR USE IN CLOSED (PROCESS OR SUPPLY) OR VENTED (DRAIN, WASTE OR VENT) PIPING SYSTEMS.
C) RIGID NONMETALLIC CONDUIT+ — NOM 4 IN. (102 MM) DIAM (OR SMALLER) SCHEDULE 40 PVC CONDUIT INSTALLED IN ACCORDANCE WITH THE NATIONAL ELECTRICAL CODE (NFPA NO. 70).
D) ELECTRICAL NONMETALLIC CONDUIT + — NOM 4 IN. (102 MM) DIAM (OR SMALLER) PVC TUBING INSTALLED IN ACCORDANCE WITH THE NATIONAL ELECTRICAL CODE (NFPA NO. 70).

4. FIRESTOP SYSTEM — THE FIRESTOP SYSTEM SHALL CONSIST OF THE FOLLOWING:

A) FILL, VOID OR CAVITY MATERIAL* – WRAP STRIP — SEE TABLE UNDER ITEM 3B FOR MIN SIZE OF INTUMESCENT WRAP STRIP. THE WRAP STRIP IS CONTINUOUSLY WRAPPED AROUND THE OUTER CIRCUMFERENCE OF THE PIPE ONCE AND SLID INTO THE ANNULAR SPACE AND HELD IN PLACE WITH A LAYER OF ALUMINUM FOIL TAPE. THE BOTTOM EDGE OF THE WRAP STRIP SHALL BE RECESSED MAX 1/2 IN. (13 MM) FROM THE BOTTOM SURFACE OF THE CONCRETE FLOOR. IN WALLS, THE WRAP STRIP SHALL BE INSTALLED ON BOTH SIDES OF THE WALL SUCH THAT THE EXPOSED EDGE OF THE WRAP STRIP IS RECESSED 1/4 IN. (6 MM) FROM EACH SIDE OF THE WALL.

SPECIFIED TECHNOLOGIES INC — SPECSEAL SSW125, SSW250, OR SSW375 WRAP STRIP.

B) FILL, VOID OR CAVITY MATERIAL* – SEALANT —MIN 1/4 IN. (6 MM) THICKNESS OF FILL MATERIAL APPLIED WITHIN THE ANNULUS, FLUSH WITH TOP SURFACE OF FLOOR OR WITH BOTH SURFACES OF WALL.

SPECIFIED TECHNOLOGIES INC — SPECSEAL SERIES SSS SEALANT, SPECSEAL LCI SEALANT, PENSIL 300 SEALANT OR SPECSEAL SERIES SIL300 SEALANT FOR FLOORS OR WALLS AND PENSIL 300 S/L SEALANT OR SPECSEAL SERIES SIL300SL SEALANT FOR FLOORS ONLY.

W RATING APPLIES ONLY WHEN PENSIL 300, SPECSEAL SERIES SIL300, PENSIL 300 S/L OR SPECSEAL SERIES SIL300SL SEALANTS ARE USED.

NOM PIPE DIAM, IN (MM)	WRAP STRIP	WRAP STRIP SIZE, THICK. X WIDTH, IN. (MM)	MAX DIAM OF OPENING, IN. (MM)	ANNULAR SPACE IN. (MM)	
				MIN	MAX
2 (51)	SSW125	1/8 X 1–1/2 (3 X 38)	3 (76)	1/8 (3)	1/2 (13)
3 (76)	SSW250	1/4 X 1–1/2 (6 X 38)	5 (127)	3/8 (10)	1–1/8 (29)
4 (102)	SSW375	3/8 X 1–1/2 (9.6 X 38)	6 (152)	3/8 (10)	1–1/8 (29)

*** INDICATES SUCH PRODUCTS SHALL BEAR THE UL OR CUL CERTIFICATION MARK FOR JURISDICTIONS EMPLOYING THE UL OR CUL CERTIFICATION (SUCH AS CANADA), RESPECTIVELY.**

15 CAJ 2574
N.T.S

SYSTEM N° C–AJ–2207
XHEZ.C–AJ–2207
THROUGH–PENETRATION FIRESTOP SYSTEMS

DESIGN/SYSTEM/CONSTRUCTION/ASSEMBLY USAGE DISCLAIMER:

• AUTHORITIES HAVING JURISDICTION SHOULD BE CONSULTED IN ALL CASES AS TO THE PARTICULAR REQUIREMENTS COVERING THE INSTALLATION AND USE OF UL CERTIFIED PRODUCTS, EQUIPMENT, SYSTEM, DEVICES, AND MATERIALS.
• AUTHORITIES HAVING JURISDICTION SHOULD BE CONSULTED BEFORE CONSTRUCTION.
• FIRE RESISTANCE ASSEMBLIES AND PRODUCTS ARE DEVELOPED BY THE DESIGN SUBMITTER AND HAVE BEEN INVESTIGATED BY UL FOR COMPLIANCE WITH APPLICABLE REQUIREMENTS. THE PUBLISHED INFORMATION CANNOT ALWAYS ADDRESS EVERY CONSTRUCTION NUANCE ENCOUNTERED IN THE FIELD.
• WHEN FIELD ISSUES ARISE, IT IS RECOMMENDED THE FIRST CONTACT FOR ASSISTANCE BE THE TECHNICAL SERVICE STAFF PROVIDED BY THE PRODUCT MANUFACTURER NOTED FOR THE DESIGN. USERS OF FIRE RESISTANCE ASSEMBLIES ARE ADVISED TO CONSULT THE GENERAL GUIDE INFORMATION FOR EACH PRODUCT CATEGORY AND EACH GROUP OF ASSEMBLIES. THE GUIDE INFORMATION INCLUDES SPECIFICS CONCERNING ALTERNATE MATERIALS AND ALTERNATE METHODS OF CONSTRUCTION.
• ONLY PRODUCTS WHICH BEAR UL'S MARK ARE CONSIDERED CERTIFIED.

XHEZ – THROUGH – PENETRATION FIRESTOP SYSTEMS

See General Information for Through–penetration Firestop Systems

SYSTEM N°. C–AJ–2207
F RATINGS 2 AND 3 HR (SEE ITEM 2)
T RATINGS 1/4, 2 AND 3 HR (SEE ITEM 2)
L RATING AT AMBIENT LESS THAN 1 CFM/SQ FT
L RATING AT 400 F 3 CFM/SQ FT

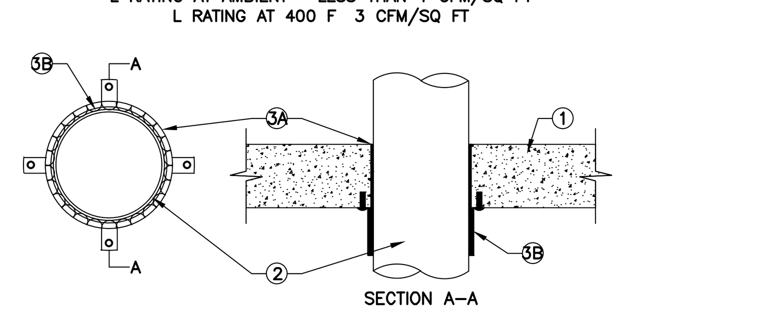

SECTION A–A

1. FLOOR OR WALL ASSEMBLY MIN 4–1/2 IN. (114 MM) THICK REINFORCED LIGHTWEIGHT OR NORMAL WEIGHT (100–150 PCF OR 1600–2400 KG/M3) CONCRETE. WALL MAY ALSO BE CONSTRUCTED OF ANY UL CLASSIFIED CONCRETE BLOCKS*. MAX DIAM OF OPENING IS 5 IN.

SEE CONCRETE BLOCK (CAZT) CATEGORY IN THE FIRE RESISTANCE DIRECTORY FOR NAMES OF MANUFACTURERS.

2. THROUGH PENETRANTS ONE NONMETALLIC PIPE OR CONDUIT TO BE INSTALLED EITHER CONCENTRICALLY OR ECCENTRICALLY WITHIN THE FIRESTOP SYSTEM. THE ANNULAR SPACE BETWEEN THE TUBING AND THE EDGE OF THE OPENING SHALL BE MIN 1/8 IN. TO (3.2 MM) MAX 1/4 IN. (6 MM). PIPE OR CONDUIT TO BE RIGIDLY SUPPORTED ON BOTH SIDES OF THE FLOOR OR WALL ASSEMBLY. THE FOLLOWING TYPES OF PIPE OR CONDUIT MAY BE USED:

A) POLYVINYL CHLORIDE (PVC) PIPE NOM 4 IN. (102 MM) DIAM (OR SMALLER) SCHEDULE 40 SOLID CORE OR CELLULAR CORE PVC PIPE FOR USE IN CLOSED (PROCESS OR SUPPLY) OR VENTED (DRAIN, WASTE OR VENT) PIPING SYSTEM.
B) CHLORINATED POLYVINYL CHLORIDE (CPVC) PIPE NOM 4 IN. (102 MM) DIAM (OR SMALLER) SDR17 CPVC PIPE FOR USE IN CLOSED (PROCESS OR SUPPLY) OR VENTED (DRAIN, WASTE OR VENT) PIPING SYSTEMS.
C) RIGID NONMETALLIC CONDUIT+ NOM 4 IN. (102 MM) DIAM (OR SMALLER) SCHEDULE 40 PVC CONDUIT INSTALLED IN ACCORDANCE WITH THE NATIONAL ELECTRICAL CODE (NFPA NO. 70).
D) ACRYLONITRILE BUTADIENE STYRENE (ABS) PIPE NOM 4 IN. (102 MM) DIAM (OR SMALLER) SCHEDULE 40 SOLID CORE OR CELLULAR CORE ABS PIPE FOR USE IN CLOSED (PROCESS OR SUPPLY) OR VENTED (DRAIN, WASTE OR VENT) PIPING SYSTEMS.
E) FIRE RETARDANT POLYPROPYLENE (FRPP) PIPE NOM 4 IN. (102 MM) DIAM (OR SMALLER) SCHEDULE 40 FRPP PIPE FOR USE IN CLOSED (PROCESS OR SUPPLY) OR VENTED (DRAIN, WASTE OR VENT) PIPING SYSTEM.
F) POLYVINYL CHLORIDE–XFR (PVC–XFR) PIPE NOM 4 IN. (102 MM) DIAM (OR SMALLER) SCHEDULE 40 SOLID CORE PVC–XFR PIPE FOR USE IN CLOSED (PROCESS OR SUPPLY) OR VENTED (DRAIN, WASTE OR VENT) PIPING SYSTEMS.
G) CHLORINATED POLYVINYL CHLORIDE (CPVC) PIPE NOM 3 IN. (76 MM) DIAM (OR SMALLER) SDR11 CPVC PIPE FOR USE IN CLOSED (PROCESS OR SUPPLY) OR VENTED (DRAIN, WASTE OR VENT) PIPING SYSTEMS.

IPEX INC AQUARISE

F AND T RATINGS ARE 2 HR FOR PVC–XFR PIPES. T RATING FOR ITEM G IS 1/4 HR.

3. FIRESTOP SYSTEM THE FIRESTOP SYSTEM SHALL CONSIST OF THE FOLLOWING:

A) FILL, VOID OR CAVITY MATERIAL* SEALANT MIN 1/4 IN. (6 MM) THICKNESS OF FILL MATERIAL APPLIED WITHIN ANNULUS, FLUSH WITH THE TOP SURFACE OF FLOOR OR WITH BOTH SURFACES OF WALL ASSEMBLY.

NUCO INC SELF SEAL GG–200, SELF SEAL GG–266

B) FIRESTOP DEVICE COLLAR COLLAR TO BE INSTALLED IN ACCORDANCE WITH THE ACCOMPANYING INSTALLATION INSTRUCTIONS. COLLAR TO BE INSTALLED AND LATCHED AROUND PIPE AND SECURED TO BOTH SIDES OF WALL WITH MIN 1/4 IN. (6 MM) DIAM BY MIN 1–1/4 IN. (32 MM) LONG STEEL CONCRETE ANCHORS IN CONJUNCTION WITH STEEL NUTS AND MIN 1–1/4 IN. (32 MM) DIAM STEEL FENDER WASHERS. MIN OF TWO, THREE OR FOUR ANCHOR BOLTS, SYMMETRICALLY LOCATED, FOR NOM 1–1/2 AND 2 IN. (38 AND 51 MM) DIAM, NOM 3 IN. (76 MM) DIAM AND NOM 4 IN. (102 MM) DIAM PIPES, RESPECTIVELY.

NUCO INC SELF SEAL SSC COLLAR.

*Bearing the UL Classification Marking
+Bearing the UL Listing Mark

14 CAJ 2207
N.T.S

SYSTEM N° C–AJ–2104
XHEZ.C–AJ–2104
THROUGH–PENETRATION FIRESTOP SYSTEMS

DESIGN/SYSTEM/CONSTRUCTION/ASSEMBLY USAGE DISCLAIMER:

• AUTHORITIES HAVING JURISDICTION SHOULD BE CONSULTED IN ALL CASES AS TO THE PARTICULAR REQUIREMENTS COVERING THE INSTALLATION AND USE OF UL CERTIFIED PRODUCTS, EQUIPMENT, SYSTEM, DEVICES, AND MATERIALS.
• AUTHORITIES HAVING JURISDICTION SHOULD BE CONSULTED BEFORE CONSTRUCTION.
• FIRE RESISTANCE ASSEMBLIES AND PRODUCTS ARE DEVELOPED BY THE DESIGN SUBMITTER AND HAVE BEEN INVESTIGATED BY UL FOR COMPLIANCE WITH APPLICABLE REQUIREMENTS. THE PUBLISHED INFORMATION CANNOT ALWAYS ADDRESS EVERY CONSTRUCTION NUANCE ENCOUNTERED IN THE FIELD.
• WHEN FIELD ISSUES ARISE, IT IS RECOMMENDED THE FIRST CONTACT FOR ASSISTANCE BE THE TECHNICAL SERVICE STAFF PROVIDED BY THE PRODUCT MANUFACTURER NOTED FOR THE DESIGN. USERS OF FIRE RESISTANCE ASSEMBLIES ARE ADVISED TO CONSULT THE GENERAL GUIDE INFORMATION FOR EACH PRODUCT CATEGORY AND EACH GROUP OF ASSEMBLIES. THE GUIDE INFORMATION INCLUDES SPECIFICS CONCERNING ALTERNATE MATERIALS AND ALTERNATE METHODS OF CONSTRUCTION.
• ONLY PRODUCTS WHICH BEAR UL'S MARK ARE CONSIDERED CERTIFIED.

XHEZ – THROUGH – PENETRATION FIRESTOP SYSTEMS
See General Information for Through–penetration Firestop Systems

SYSTEM N°. C–AJ–2104
F RATING 2 HR
T RATING 0 HR
L RATING AT AMBIENT 1 CFM/SQ FT
L RATING AT 400 F LESS THAN 1 CFM/SQ FT
W RATING CLASS 1 (SEE ITEM 3B)

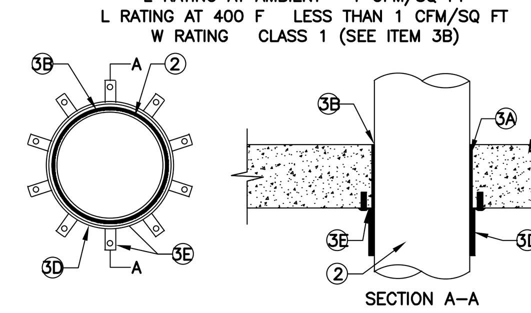

SECTION A–A

1. FLOOR OR WALL ASSEMBLY — MIN 4–1/2 IN. (114 MM) THICK REINFORCED LIGHTWEIGHT OR NORMAL WEIGHT (100–150 PCF OR 1600–2400 KG/M3) CONCRETE FLOOR OR MIN 5 IN. (127 MM) THICK REINFORCED LIGHTWEIGHT OR NORMAL WEIGHT CONCRETE WALL. WALL MAY ALSO BE CONSTRUCTED OF ANY UL CLASSIFIED CONCRETE BLOCKS*. MAX DIAM OF OPENING IS 10 IN. (254 MM). SEE CONCRETE BLOCKS (CAZT) CATEGORY IN THE FIRE RESISTANCE DIRECTORY FOR NAMES OF MANUFACTURERS.

2. THROUGH PENETRANTS — ONE NONMETALLIC PIPE TO BE CENTERED WITHIN THE FIRESTOP SYSTEM. A NOM ANNULAR SPACE OF 1/8 IN. (3 MM) TO 11/16 IN.(17 MM) IS REQUIRED WITHIN THE FIRESTOP SYSTEM (SEE ITEM 4). PIPE TO BE RIGIDLY SUPPORTED ON BOTH SIDES OF THE FLOOR OR WALL ASSEMBLY. THE FOLLOWING TYPES AND SIZES OF NONMETALLIC PIPES MAY BE USED:

A) POLYVINYL CHLORIDE (PVC) PIPE — NOM 8 IN. (203 MM) DIAM (OR SMALLER) SCHEDULE 40 PVC PIPE FOR USE IN CLOSED (PROCESS OR SUPPLY) OR VENTED (DRAIN, WASTE, OR VENT) PIPING SYSTEMS.
B) FLAME RETARDANT POLYPROPYLENE (FRPP) PIPE — NOM 8 IN. (203 MM) DIAM (OR SMALLER) SCHEDULE 40 FRPP PIPE FOR USE IN CLOSED (PROCESS OR SUPPLY) OR VENTED (DRAIN, WASTE OR VENT) PIPING SYSTEMS.
C) CHLORINATED POLYVINYL CHLORIDE (CPVC) PIPE — NOM 8 IN. (203 MM) DIAM (OR SMALLER) SDR 13.5 CPVC PIPE FOR USE IN CLOSED (PROCESS OR SUPPLY) PIPING SYSTEMS.
D) RIGID NONMETALLIC CONDUIT+ — NOM 6 IN. (152 MM) DIAM (OR SMALLER) SCHEDULE 40 PVC CONDUIT INSTALLED IN ACCORDANCE WITH THE NATIONAL ELECTRICAL CODE (NFPA NO. 70).

3. FIRESTOP SYSTEM — THE FIRESTOP SYSTEM SHALL CONSIST OF THE FOLLOWING:

A) PACKING MATERIAL — MIN 4 IN. (102 MM) THICKNESS OF 4 PCF (64 KG/M3) MINERAL WOOL FIRMLY PACKED INTO OPENING AS A PERMANENT FORM. PACKING MATERIAL TO BE RECESSED FROM TOP SURFACE OF FLOOR OR BOTH SURFACES OF WALL AS REQUIRED TO ACCOMMODATE THE REQUIRED THICKNESS OF FILL MATERIAL.
B) **FILL, VOID OR CAVITY MATERIAL* — SEALANT** — MIN 1/2 IN. (13 MM) THICKNESS OF FILL MATERIAL APPLIED WITHIN THE ANNULUS, FLUSH WITH TOP SURFACE OF FLOOR OR BOTH SURFACES OF WALL.

SPECIFIED TECHNOLOGIES INC — SPECSEAL SERIES SSS SEALANT, SPECSEAL LCI SEALANT, PENSIL 300 SEALANT OR SPECSEAL SERIES SIL 300 SEALANT FOR FLOORS AND WALLS AND PENSIL 300 SL SEALANT OR SPECSEAL SERIES SIL 300SL SEALANT FOR FLOORS ONLY.
W RATING APPLIES ONLY WHEN PENSIL 300, SPECSEAL SERIES SIL 300, PENSIL 300 S/L OR SPECSEAL SERIES SIL 300SL SEALANTS ARE USED.

C) ALUMINUM FOIL TAPE — (NOT SHOWN) —NOM 3 MIL (0.08 MM) THICK PRESSURE SENSITIVE ALUMINUM FOIL TAPE WRAPPED AROUND THE OUTER CIRCUMFERENCE OF THE THROUGH PENETRANT WITH A 1 IN. (25 MM) WIDE OVERLAP ALONG ITS PERIMETER JOINT. FOIL TAPE SHALL ABUT AGAINST THE BOTTOM SURFACE OF THE CONCRETE FLOOR OR BOTH SURFACES OF THE WALL AND EXTEND A MIN 5 IN. (127 MM) BELOW THE BOTTOM SURFACE OF THE CONCRETE FLOOR OR BOTH SURFACES OF THE WALL.
D) FILL, VOID OR CAVITY MATERIAL* — WRAP STRIP — NOM 1/8 IN. (3.2 MM) OR 3/16 IN (4.8 MM) THICK INTUMESCENT MATERIAL FACED ON BOTH SIDES WITH A PLASTIC FILM, SUPPLIED IN 2 IN (51 MM) WIDE STRIPS. IN FLOOR ASSEMBLIES, TWO STACKS OF WRAP STRIPS ARE INDIVIDUALLY WRAPPED AROUND THE THROUGH PENETRANT WITH THE ENDS BUTTED AND HELD IN PLACE WITH MASKING TAPE. BUTTED ENDS IN SUCCESSIVE LAYERS MAY BE ALIGNED OR OFFSET. THE EDGE OF THE WRAP STRIPS SHALL ABUT THE SURFACE OF THE CONCRETE FLOOR OR WALL. IN FLOOR ASSEMBLIES, THE TWO STACKS OF WRAP STRIPS ARE INSTALLED ON THE BOTTOM SIDE OF THE CONCRETE FLOOR. IN WALL ASSEMBLIES, THE TWO STACKS OF WRAP STRIPS ARE INSTALLED ON EACH SIDE OF THE CONCRETE WALL. THE NUMBER OF LAYERS OF WRAP STRIPS PER STACK IS DEPENDENT UPON THE DIAM. OF THE THROUGH–PENETRANT AS TABULATED BELOW:

DIAM OF THROUGH PENETRANT, IN (MM)	LAYERS OF WRAPS STRIP PER STACK
6 (152)	3
8 (203)	4

SPECIFIED TECHNOLOGIES INC – SpecSeal BLU Wrap Strip or SpecSeal BLU2 Wrap Strip

E) STEEL COLLAR —COLLAR FABRICATED FROM COILS OF PRECUT 0.029 IN. (0.7 MM) THICK (NO. 22 MSG) GALV SHEET STEEL AVAILABLE FROM WRAP STRIP MANUFACTURER. COLLAR SHALL BE NOM 4 IN. (102 MM) DEEP WITH MIN SIX 1 IN. (25 MM) WIDE BY 2 IN. (51 MM) LONG ANCHOR TABS FOR ATTACHMENT TO THE CONCRETE FLOOR OR WALL. RETAINER TABS, 3/4 IN. (19 MM) WIDE TAPERING DOWN TO 3/8 IN. (10 MM) WIDE AND LOCATED OPPOSITE THE ANCHOR TABS, ARE FOLDED 90 DEGREES TOWARD THROUGH PENETRANT SURFACE TO MAINTAIN THE ANNULAR SPACE AROUND THE PIPE AND TO RETAIN THE WRAP STRIPS. STEEL COLLAR WRAPPED AROUND WRAP STRIPS AND THROUGH PENETRANT WITH A 1 IN. (25 MM) WIDE OVERLAP ALONG ITS PERIMETER JOINT. STEEL COLLAR TIGHTENED AROUND WRAP STRIPS AND THROUGH PENETRANT USING MIN 1/2 IN. (13 MM) WIDE BY 0.028 IN. (0.7 MM) THICK STAINLESS STEEL HOSE CLAMP SPACED 2 IN. (51 MM) OC. COLLAR SECURED TO CONCRETE SURFACE WITH 1/4 IN. (6 MM) DIAM BY MIN 1–1/4 IN. (32 MM) LONG STEEL CONCRETE SCREWS IN CONJUNCTION WITH MIN 1 IN. (25 MM) DIAM STEEL FENDER WASHERS. AS AN ALTERNATE TO THE STEEL CONCRETE SCREWS, NOM 1–1/4 IN. (32 MM) LONG STEEL POWDER ACTUATED FASTENERS PROVIDED WITH 3/4 IN. (19 MM) DIAM STEEL WASHERS MAY BE USED TO SECURE ANCHOR TABS.

4. FIRESTOP DEVICE* — (NOT SHOWN) AS AN OPTION TO THE WRAP STRIP AND THE STEEL COLLAR (ITEM NOS. 3D AND 3E), A FIRESTOP DEVICE CONSISTING OF STEEL COLLAR LINED WITH AN INTUMESCENT MATERIAL SIZED TO FIT THE SPECIFIC DIAM OF THE NONMETALLIC THROUGH PENETRANT MAY BE USED FOR NONMETALLIC THROUGH PENETRANTS HAVING A NOM DIAM OF 6 IN. (152 MM) OR LESS. DEVICE SHALL BE INSTALLED IN ACCORDANCE WITH THE INSTALLATION INSTRUCTIONS SUPPLIED WITH THE PRODUCT. IN FLOORS, THE DEVICE SHALL BE INSTALLED ON THE BOTTOM SIDE OF THE CONCRETE FLOOR. IN WALL ASSEMBLIES, THE DEVICE SHALL BE INSTALLED ON EACH SIDE OF THE CONCRETE WALL. DEVICE SHALL BE SECURED TO CONCRETE SURFACE WITH 1/4 IN. (6 MM) DIAM BY MIN 1–1/4 IN. (32 MM) LONG STEEL CONCRETE SCREWS IN CONJUNCTION WITH MIN 1 IN. (25 MM) DIAM STEEL FENDER WASHERS. AS AN ALTERNATE TO THE STEEL CONCRETE SCREWS, NOM 1–1/4 IN. (32 MM) LONG STEEL POWDER ACTUATED FASTENERS PROVIDED WITH 3/4 IN. (19 MM) DIAM STEEL WASHERS MAY BE USED TO SECURE DEVICE.

SPECIFIED TECHNOLOGIES INC — SPECSEAL FIRESTOP COLLAR, SPECSEAL LCC COLLAR OR SPECSEAL SSC COLLAR. WHEN SPECSEAL LCC COLLAR OR SPECSEAL SSC COLLAR ARE USED, THE MAX ANNULAR SPACE SHALL BE 1/8 IN. (3 MM) FOR MAX 2–1/2 IN. (64 MM) DIAM PIPE OR CONDUIT AND SHALL BE MAX 1/4 IN. (6 MM) FOR PIPE OR CONDUIT LARGER THAN 2–1/2 IN. (64 MM) DIAM.

* INDICATES SUCH PRODUCTS SHALL BEAR THE UL OR CUL CERTIFICATION MARK FOR JURISDICTIONS EMPLOYING THE UL OR CUL CERTIFICATION (SUCH AS CANADA), RESPECTIVELY.

13 CAJ 2104
N.T.S

AAC
PZ22-12000008
11/01/2022

17 NOT USED

System No. C–AJ–1149
F Rating – 2 Hr
T Rating – 0 Hr
L Rating At Ambient – Less Than 1 CFM/sq ft
L Rating At 400 F – 4 CFM/sq ft

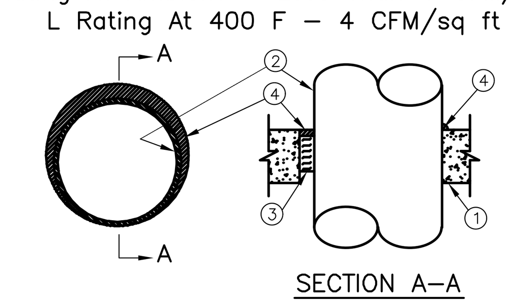

SECTION A–A

1. Floor or Wall Assembly – Min 4–1/2 in. thick reinforced lightweight or normal weight (100–150 pcf) concrete. Wall may also be constructed of any UL Classified Concrete Blocks *. Max diam of opening is 12 in. See Concrete Blocks (CAZT) category in the Fire Resistance Directory for names of manufacturers.

2. Through Penetrants – One metallic pipe, conduit or tubing to be installed within the firestop system. Pipe, conduit or tubing to be rigidly supported on both sides of floor or wall assembly. The annular space shall be 0 in (point contact) to max 1–1/4 in. The following types and sizes of metallic pipes, conduits or tubing may be used:

A) Steel Pipe – Nom 10 in. diam (or smaller) Schedule 10 (or heavier) steel pipe.
B) Conduit – Nom 4 in. diam (or smaller) steel electrical metallic tubing or steel conduit.
C) Copper Tubing – Nom 4 in. diam (or smaller) Type L (or heavier) copper tubing.
D) Copper Pipe – Nom 4 in. diam (or smaller) Regular (or heavier) copper pipe.

3. Packing Material – Min 3 in. thickness of min 4 pcf mineral wool batt insulation for nom 4 in. diam (and smaller) pipes, conduits or tubings and a min 4 in. thickness of min 4 pcf mineral wool batt insulation for pipe greater than nom 4 in. diam, firmly packed into opening as a permanent form. Packing material to be recessed from top surface of floor or from both surfaces of wall as required to accommodate the required thickness of fill material.

4. Fill, Void or Cavity Material* – Sealant – Min 1/2 in. thickness of fill material applied within the annulus, flush with the top surface of floor or both surfaces of wall. At the point of contact location between pipe and concrete, a min 1/2 in. diam bead of fill material shall be applied at the concrete/pipe interface on the top surface of floor and on both surfaces of wall. HILTI CONSTRUCTION CHEMICALS, DIV OF HILTI INC – CP601S, CP606 or FS–ONE Sealant

(Note: L Ratings apply only when FS–ONE Sealant is used).

*Bearing the UL Classification Marking

FIRESTOP SYSTEMS

Reproduced by HILTI, Inc. Courtesy of Underwriters Laboratories, Inc. December 20, 2000

CLASSIFIED C UL US

12 CAJ 1149
N.T.S

System No. C–AJ–2488
F Rating – 2 Hr
T Rating – 0 Hr

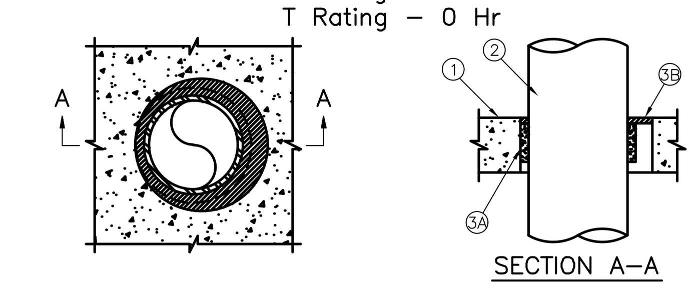

SECTION A–A

1. Floor or Wall Assembly – Min 2–1/2 in. thick reinforced lightweight or normal weight (100–150 pcf) concrete. Wall may also be constructed of any UL Classified Concrete Blocks*. See Table under Item 3B for max diam of opening. See Concrete Blocks (CAZT) category in the Fire Resistance Directory for names of manufacturers.

2. Through–Penetrants – One nonmetallic pipe or conduit installed within the firestop system. See Table under Item 3B for annular space required in the firestop system. Pipe to be rigidly supported on both sides of floor or wall assembly. The following types and sizes of nonmetallic pipes may be used:

A) Polyvinyl Chloride (PVC) Pipe – Nom 4 in. diam (or smaller) Schedule 40 cellular or solid core PVC pipe for use in closed (process or supply) or vented (drain, waste or vent) piping systems.
B) Chlorinated Polyvinyl Chloride (CPVC) Pipe – Nom 4 in. diam (or smaller) SDR 13.5 CPVC pipe for use in closed (process or supply) piping systems.
C) Acrylonitrile Butadiene Styrene (ABS) Pipe – Nom 4 in. diam (or smaller) Schedule 40 cellular or solid core ABS pipe for use in closed (process or supply) or vented (drain, waste or vent) piping system.

3. Firestop System – The firestop system shall consist of the following:
A) Fill, Void or Cavity Material* Wrap Strip – See Table under Item 3B for min size of intumesce wrap strip. The wrap strip is continuously wrapped around the outer circumference of the pipe once and slid into the annular space and held in place with integral fastening tape. The top edge of the wrap strip shall be recessed 1/4 in.from the top surface of the concrete floor. In walls, the wrap shall be installed on both surfaces of the wall such that the exposed edge of the wrap strip is flush with each side of the wall.

Nom Pipe Diam, in.	Wrap Strip	Wrap Strip Size Thick. x width, in.	Max Diam of Opening, in.	ANNULAR SPACE	
				MINIMUM	MAXIMUM
1–1/2	CP 648S – 1.5 US	3/16 x 1	3"	3/16"	3/4"
2	CP 648S – 2 US	3/16 x 1	3–1/2"	3/16"	15/16"
3	CP 648S – 3 US	4	4"	3/16"	5/16"
4	CP 648S – 4 US	6	6"	3/8"	1–1/8"

*Bearing the UL Classification Mark

FIRESTOP SYSTEMS

Reproduced by HILTI, Inc. Courtesy of Underwriters Laboratories, Inc. October 25, 2004

CLASSIFIED C UL US

16 CAJ 2488
N.T.S

SYSTEM NO. C-AJ-7023
JANUARY 06, 1999
F RATING — 2 HR
T RATING — 0 HR

1. FLOOR OR WALL ASSEMBLY — MIN 4–1/2 IN. THICK REINFORCED LIGHTWEIGHT OR NORMAL WEIGHT (100–150 PCF) CONCRETE.WALL MAY ALSO BE CONSTRUCTED OF ANY UL CLASSIFI ED CONCRETE BLOCKS*. MAX DIAM OF OPENING IS 8 IN. SEE CONCRETE BLOCK (CAZT) CATEGORY IN THE FIRE RESISTANCE DIRECTORY FOR NAMES OF MANUFACTURERS.

2. STEEL DUCT — NOM 6 IN. DIAM (OR SMALLER) NO. 28 GAUGE (OR HEAVIER) STEEL DUCT OR NOM 4 IN. DIAM (OR SMALLER) NO. 30 GAUGE (OR HEAVIER) STEEL DUCT. ONE STEEL DUCT TO BE INSTALLED EITHER CONCENTRICALLY OR ECCENTRICALLY WITHIN THE FIRESTOP SYSTEM. THE ANNULAR SPACE BETWEEN THE STEEL DUCT AND THE PERIPHERY OF THE OPENING SHALL BE MIN 1/4 IN. TO A MAX 1–3/4 IN. STEEL DUCT TO BE RIGIDLY SUPPORTED ON BOTH SIDES OF FLOOR OR WALL ASSEMBLY.

3. FIRESTOP SYSTEM — THE FIRESTOP SYSTEM SHALL CONSIST OF THE FOLLOWING:

A. PACKING MATERIAL — MIN 2 IN. THICKNESS OF MIN 4 PCF MINERAL WOOL BATT INSULATION FIRMLY PACKED INTO OPENING AS A PERMANENT FORM. PACKING MATERIAL TO BE RECESSED FROM TOP SURFACE OF FLOOR OR FROM BOTH SURFACES OF WALL AS REQUIRED TO ACCOMMODATE THE REQUIRED THICKNESS OF FILL MATERIAL.

B. FILL, VOID OR CAVITY MATERIAL* — SEALANT — MIN 1/2 IN. THICKNESS OF FILL MATERIAL APPLIED WITHIN THE ANNULUS, FLUSH WITH TOP SURFACE OF FLOOR OR WITH BOTH SURFACES OF WALL ASSEMBLY. SPECIFIED TECHNOLOGIES INC — SPECSEAL 100, 101, 102 OR 105 SEALANT

*BEARING THE UL CLASSIFICATION MARKING.

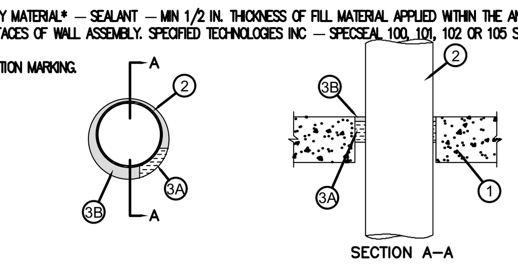

SECTION A–A

11 METAL PIPE THRU CONCRETE SLAB AND WALL
N.T.S

REVISIONS:

REV.	REV. ISSUE
1	05/10/2022

2203

GATEWAY LUXURY APARTMENTS
LOCATED AT:
950 N POWERLINE ROAD,
POMPANO BEACH FL 33069

BURGOS LANZA & ASSOCIATES
1248 S ALHAMBRA CIRCLE
CORAL GABLES, FL 33146
(786) 554-9035
AIA 38052598
WWW.BURGOSLANZA.COM

PABLO BURGOS ARCHITECT AR 0095925
CARLOS LANZA ARCHITECT AR 0016081

BURGOS LANZA ARCHITECTS & PLANNERS
AA 26001519

COPYRIGHT 2021 BURGOS LANZA & ASSOCIATES THE ARCHITECTURAL DESIGN AND DETAIL DRAWINGS ARE THE LEGAL PROPERTY OF BURGOS LANZA ARCHITECTS AND ARE INSTRUMENTS OF SERVICE NOT TO BE REPRODUCE IN WHOLE OR IN PARTS WITHOUT THE EXPRESS WRITTEN CONSENT OF THE SAME

Pablo Burgos
Digitally signed by Pablo Burgos
DN: cn=Pablo Burgos, o=Burgos Lanza & Assoc., ou=AR95925, email=pburgos@burgoslanza.com, c=US
Date: 2022.05.11 14:47:51 -04'00'

DATE	11/09/21
DRAWN	CR
PROJECT No.	2203
SCALE	AS–SHOWN

FIRE STOPPING DETAILS

A7.08